FT-15B/D

TOMSED CORP.
College Point, N.Y.
1/3/84
A.M.G.

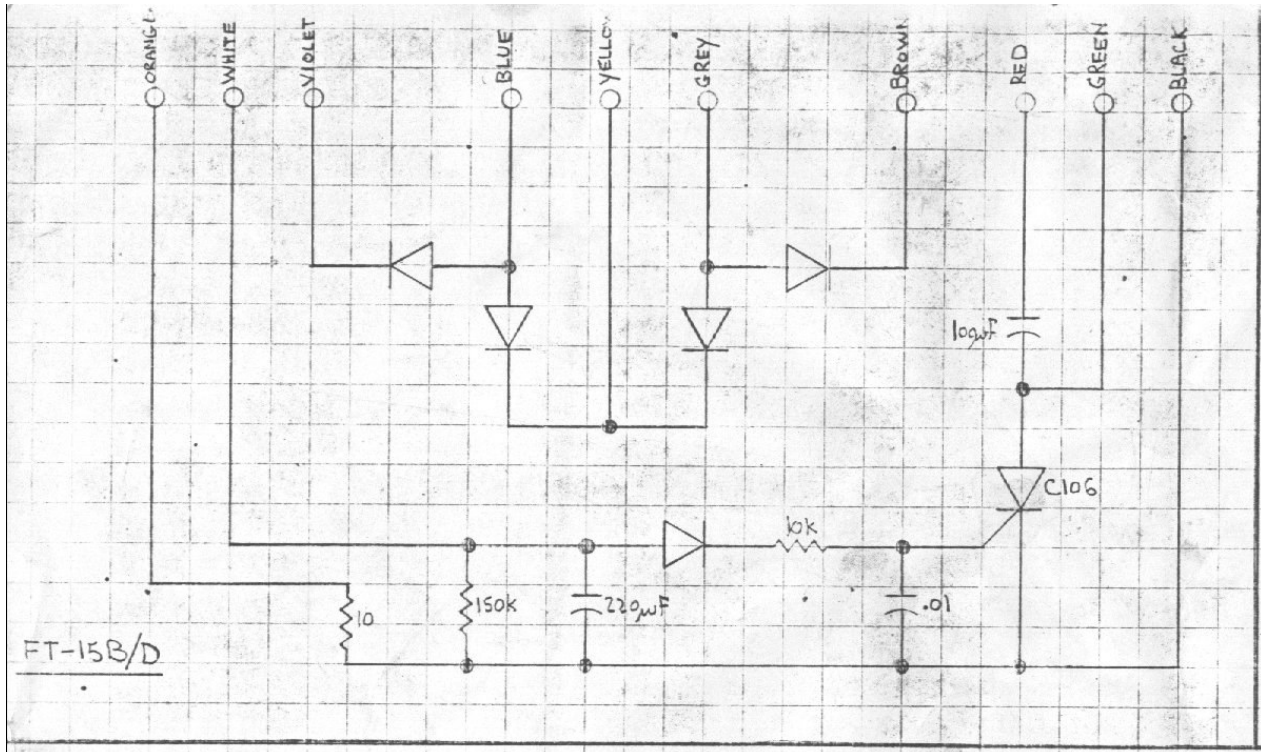

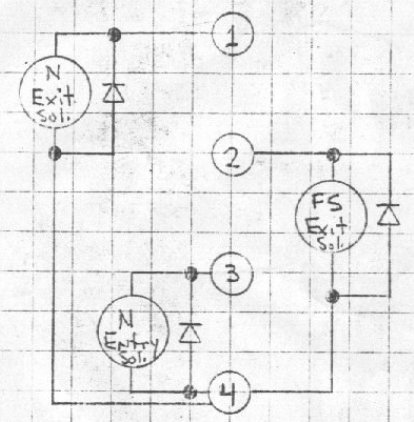

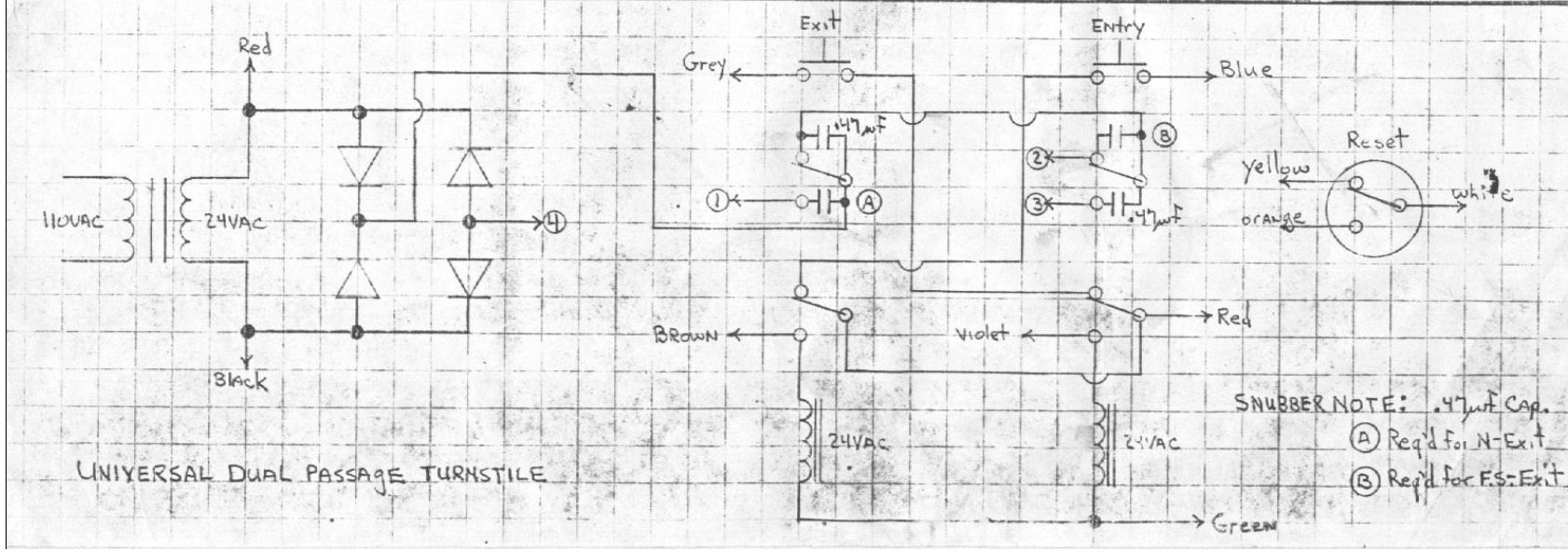

UNIVERSAL DUAL PASSAGE TURNSTILE